iiyama
Vision&Technology

USER MANUAL

ProLite

LCD Monitor

ENGLISH

ProLite XB2483HSU
ProLite X2483HSU

Thank you very much for choosing the iiyama LCD monitor.
We recommend that you take a few minutes to read this comprehensive manual carefully before installing and switching on the monitor. Please keep this manual in a safe place for your future reference.

ENERGY STAR

iiyama | Servicecard

Dear user, we congratulate you on the purchase of your iiyama LCD.

For details on warranty and locally used pixel policies that apply directly after installation of your product please check the iiyama website.

To report a fault, please contact your local support centre found at www.iiyama.com/service

Things to check before you call the iiyama information line

| if the power cable is connected securely and turned on?

| if the display has been turned on?

| if the signal cable is connected securely and the correct input selected?

| if the computer has been restarted with the display connected?

| if the graphics card is correctly installed with the latest drivers possible?

| if the correct native resolution has been selected via 'Display Properties'?

| If the R/G/B signal configuration is correct?

| if the displays On Screen Menu is shown?

| if the correct brightness and contrast settings have been set?

| if given display tolerances and compatibility have been considered?

| if via the On Screen Menu you have performed a Factory Reset/Recall?

Before reporting the screen defect, please prepare the following information/evidence:

| model number *

| purchase receipt and serial number *

| name and address for collection

| telephone/fax number, for availability during the day

| convenient collection date (date, time)

| short description of the defect

Important Note:

If there is no fault found in the collected equipment after inspection, the transferring party shall incur charges for transport and administration.

If you have checked all of the above and there is still no picture, call our information line for assistance in your country.

* see the identification plate on the back of the case.

TCO DEVELOPMENT

Congratulations!

This product is TCO Certified – for Sustainable IT

ENGLISH

TCO Certified is an international third party sustainability certification for IT products. TCO Certified ensures that the manufacture, use and recycling of IT products reflect environmental, social and economic responsibility. Every TCO Certified product model is verified by an accredited independent test laboratory.

This product has been verified to meet all the criteria in TCO Certified, including:

Corporate Social Responsibility
Socially responsible production - working conditions and labor law in manufacturing country
Energy Efficiency
Energy efficiency of product and power supply. Energy Star compliant, where applicable
Environmental Management System
Manufacturer must be certified according to either ISO 14001 or EMAS
Minimization of Hazardous Substances
Limits on cadmium, mercury, lead & hexavalent chromium including requirements for mercury-free products, halogenated substances and hazardous flame retardants
Design for Recycling
Coding of plastics for easy recycling. Limit on the number of different plastics used.
Product Lifetime, Product Take Back
Minimum one-year product warranty. Minimum three-year availability of spare parts. Product takeback
Packaging
Limits on hazardous substances in product packaging. Packaging prepared for recycling
Ergonomic, User-centered design
Visual ergonomics in products with a display. Adjustability for user comfort (displays, headsets)
Acoustic performance – protection against sound spikes (headsets) and fan noise (projectors, computers)
Ergonomically designed keyboard (notebooks)
Electrical Safety, minimal electro-magnetic Emissions
Third Party Testing
All certified product models have been tested in an independent, accredited laboratory.

A detailed criteria set is available for download at www.tcodevelopment.com, where you can also find a searchable database of all TCO Certified IT products.

TCO Development, the organization behind TCO Certified, has been an international driver in the field of Sustainable IT for 20 years. Criteria in TCO Certified are developed in collaboration with scientists, experts, users and manufacturers. Organizations around the world rely on TCO Certified as a tool to help them reach their sustainable IT goals. We are owned by TCO, a non-profit organization representing office workers. TCO Development is headquartered in Stockholm, Sweden, with regional presence in North America and Asia.

For more information, please visit
www.tcodevelopment.com

ENGLISH

CE MARKING DECLARATION OF CONFORMITY

This LCD monitor complies with the requirements of the EC/EU Directive 2004/108/EC “EMC Directive”, 2006/95/EC “Low Voltage Directive”, 2009/125/EC “ErP Directive” and 2011/65/EU “RoHS Directive”.

The electro-magnetic susceptibility has been chosen at a level that gives correct operation in residential areas, business and light industrial premises and small-scale enterprises, inside as well as outside of the buildings. All places of operation are characterised by their connection to the public low voltage power supply system.

IIYAMA CORPORATION: Wijkermeerstraat 8, 2131 HA Hoofddorp, The Netherlands

Model No. : PL2483H

We recommend recycling of used product. Please contact your dealer or iiyama service center. Recycle information is obtained via the Internet, using the address: http://www.iiyama.com

You can access the Web page of different countries from there.

- We reserve the right to change specifications without notice.
- All trademarks used in this user manual are the property of their respective owners.
- As an ENERGY STAR® Partner, iiyama has determined that this product meets the ENERGY STAR® guidelines for energy efficiency.

TABLE OF CONTENTS

FOR YOUR SAFETY....1
SAFETY PRECAUTIONS....1
SPECIAL NOTES ON LCD MONITORS....3
CUSTOMER SERVICE....3
CLEANING....3
BEFORE YOU OPERATE THE MONITOR....4
FEATURES....4
CHECKING THE CONTENTS OF THE PACKAGE....4
WALL MOUNTING....5
FITTING AND REMOVAL OF BASE : ProLite XB2483HSU....6
FITTING AND REMOVAL OF BASE : ProLite X2483HSU....7
CONTROLS AND CONNECTORS : ProLite XB2483HSU....8
CONTROLS AND CONNECTORS : ProLite X2483HSU....9
CONNECTING YOUR MONITOR : ProLite XB2483HSU....10
CONNECTING YOUR MONITOR : ProLite X2483HSU....11
COMPUTER SETTING....12
ADJUSTING THE VIEWING ANGLE : ProLite X2483HSU....12
ADJUSTING THE HEIGHT AND THE VIEWING ANGLE : ProLite XB2483HSU....13
PANEL ROTATION : ProLite XB2483HSU....13
OPERATING THE MONITOR....14
ADJUSTMENT MENU CONTENTS....15
SCREEN ADJUSTMENTS....21
POWER MANAGEMENT FEATURE....24
TROUBLE SHOOTING....25
RECYCLING INFORMATION....26
APPENDIX....27
SPECIFICATIONS : ProLite XB2483HSU....27
SPECIFICATIONS : ProLite X2483HSU....28
DIMENSIONS : ProLite XB2483HSU....29
DIMENSIONS : ProLite X2483HSU....29
COMPLIANT TIMING....30

FOR YOUR SAFETY

SAFETY PRECAUTIONS

WARNING

STOP OPERATING THE MONITOR WHEN YOU SENSE TROUBLE

If you notice any abnormal phenomena such as smoke, strange sounds or fumes, unplug the monitor and contact your dealer or iiyama service center immediately. Further use may be dangerous and can cause fire or electric shock.

NEVER REMOVE THE CABINET

High voltage circuits are inside the monitor. Removing the cabinet may expose you to the danger of fire or electric shock.

DO NOT PUT ANY OBJECT INTO THE MONITOR

Do not put any solid objects or liquids such as water into the monitor. In case of an accident, unplug your monitor immediately and contact your dealer or iiyama service center. Using the monitor with any object inside may cause fire, electric shock or damage.

INSTALL THE MONITOR ON A FLAT, STABLE SURFACE

The monitor may cause an injury if it falls or is dropped.

DO NOT USE THE MONITOR NEAR WATER

Do not use where water may be splashed or spilt onto the monitor as it may cause fire or electric shock.

OPERATE UNDER THE SPECIFIED POWER SUPPLY

Be sure to operate the monitor only with the specified power supply. Use of an incorrect voltage will cause malfunction and may cause fire or electric shock.

PROTECT THE CABLES

Do not pull or bend the power cable and signal cable. Do not place the monitor or any other heavy objects on the cables. If damaged, the cables may cause fire or electric shock.

ADVERSE WEATHER CONDITIONS

It is advisable not to operate the monitor during a heavy thunder storm as the continual breaks in power may cause malfunction. It is also advised not to touch the plug in these circumstances as it may cause electric shock.

CAUTION

INSTALLATION LOCATION

Do not install the monitor where sudden temperature changes may occur, or in humid, dusty or smoky areas as it may cause fire, electric shock or damage. You should also avoid areas where the sun shines directly on the monitor.

DO NOT PLACE THE MONITOR IN A HAZARDOUS POSITION

The monitor may topple and cause injury if not suitably located. Please also ensure that you do not place any heavy objects on the monitor, and that all cables are routed such that children may not pull the cables and possibly cause injury.

ENGLISH

MAINTAIN GOOD VENTILATION

Ventilation slots are provided to keep the monitor from overheating. Covering the slots may cause fire. To allow adequate air circulation, place the monitor at least 10 cm (or 4 inches) from any walls.

Do not remove the tilt stand when operating the monitor. Ventilation slots on the back of the cabinet will be blocked and the monitor may overheat if the stand is removed. This may cause fire or damage. Operating the monitor on its back, side, upside down or on a carpet or any other soft material may also cause damage.

DISCONNECT THE CABLES WHEN YOU MOVE THE MONITOR

When you move the monitor, turn off the power switch, unplug the monitor and be sure the signal cable is disconnected. If you do not disconnect them, it may cause fire or electric shock.

UNPLUG THE MONITOR

If the monitor is not in use for a long period of time it is recommended that it is left unplugged to avoid accidents.

HOLD THE PLUG WHEN DISCONNECTING

To disconnect the power cable or signal cable, always pull it by the plug. Never pull on the cable itself as this may cause fire or electric shock.

DO NOT TOUCH THE PLUG WITH WET HANDS

Pulling or inserting the plug with wet hands may cause electric shock.

WHEN YOU INSTALL THE MONITOR ON YOUR COMPUTER

Be sure the computer is strong enough to hold the weight of the monitor, otherwise, you may damage your computer.

REMARK FOR 24/7 USAGE

This product is not specifically designed for 24/7 usage in all environments.

OTHERS

ERGONOMIC RECOMMENDATIONS

To eliminate eye fatigue, do not operate the monitor against a bright background or in a dark room. For optimal viewing comfort, the monitor should be just below eye level and 40-60 cm (16-24 inches) away from your eyes. When using the monitor over a prolonged time, a ten minute break every hour is recommended as looking at the screen continuously can cause eye strain.

SPECIAL NOTES ON LCD MONITORS

The following symptoms are normal with LCD monitors and do not indicate a problem.

NOTE

- When you first turn on the LCD monitor, the picture may not fit in the display area because of the type of computer that is used. In this case, adjust the picture position to the correct position.
- You may find slightly uneven brightness on the screen depending on the desktop pattern you use.
- Due to the nature of the LCD screen, an afterimage of the previous screen may remain after switching the image, when the same image is displayed for hours. In this case, the screen can be recovered slowly by changing the image or turning off the Power Switch for some hours.

CUSTOMER SERVICE

NOTE

- If you have to return your unit for service and the original packaging has been discarded, please contact your dealer or iiyama service center for advice or replacement packaging.

CLEANING

WARNING

- If you drop any materials or liquids such as water into the monitor when cleaning, unplug the power cable immediately and contact your dealer or iiyama service center.

CAUTION

- For safety reasons, turn off the power switch and unplug the monitor before you clean it.

NOTE

- To protect the LCD panel, do not scratch or rub the screen with a hard object.
- Never use any of the following strong solvents. These will damage the cabinet and the LCD screen.

Thinner	Spray-type cleaner
Benzine	Wax
Abrasive cleaner	Acid or Alkaline solvent

- Touching the cabinet with any product made from rubber or plastic for a long time may cause degeneration or loss of paint on the cabinet.

CABINET

Stains can be removed with a cloth lightly moistened with a mild detergent solvent. Then wipe the cabinet with a soft dry cloth.

LCD SCREEN

Periodic cleaning with a soft dry cloth is recommended.
Don't use tissue paper etc. because these will damage the LCD screen.

BEFORE YOU OPERATE THE MONITOR

FEATURES

- **Supports Resolutions up to 1920 × 1080**
- **High Contrast 3000:1 (Typical), Adv. Contrast Function Available / Brightness 250cd/m^2 (Typical) / Response Time : 4ms (Gray to Gray)**
- **Blue Light Reducer**
- **Digital Character Smoothing**
- **Automatic Set-up**
- **Stereo Speakers**
  2 × 2W Stereo Speakers
- **Plug & Play VESA DDC2B Compliant**
  Windows® Vista/7/8/8.1/10 Compliant
- **Power Management (ENERGY STAR® VESA DPMS Compliant)**
- **VESA Mounting Standard (100mm×100mm) Compliant**
- **Keyhole for Security Lock**

ENGLISH

CHECKING THE CONTENTS OF THE PACKAGE

The following accessories are included in your package. Check to see if they are enclosed with the monitor. If anything is missing or damaged, please contact your local iiyama dealer or regional iiyama office.

- Power Cable*1
- DVI-D Cable
- USB Cable
- Audio Cable
- Stand-Base
- Stand*2
- Screw for stand fixing (3pcs)*3
- Safety Guide
- Quick Start Guide

CAUTION

*1 The rating of the Power Cable enclosed in 120V area is 10A/125V. If you are using a power supply higher than this rating, then a power cable with a rating of 10A/250V must be used. However, all guarantees and warranties are void for any problems or damage caused by a power cable not supplied by iiyama.

*2 Accessory for ProLite X2483HSU.

*3 Accessory for ProLite XB2483HSU.

WALL MOUNTING

WARNING

- When you use with the wall mounting, in consideration of thickness of the mounting stage, tighten the M4 Screw with washer which “L” length is 7mm to fasten the monitor. Using the screw longer than this may cause electric shock or damage because it may contact with the electrical parts inside the monitor.
- Please check if the wall or ceiling can support the weight of the monitor before mounting it.

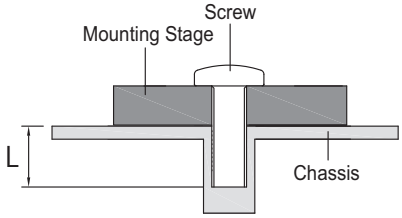

FITTING AND REMOVAL OF BASE : ProLite XB2483HSU

CAUTION

- Put the monitor on a stable surface. The monitor may cause injury or damage if it falls or is dropped.
- Do not give a strong impact to the monitor. It may cause damage.
- Unplug the monitor before removal or installation to avoid electric shock or damage.

ENGLISH

<Installation>

① Put a piece of soft cloth on the table beforehand to prevent the monitor from being scratched. Lay the monitor flat on a table with front face down.
② Hold the monitor and push the Stand-Base.
③ Use 'thumb screw' provided to secure base to monitor column.

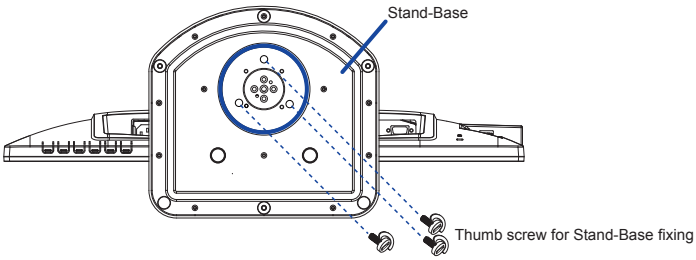

<Removal>

① Put a piece of soft cloth on the table beforehand to prevent the monitor from being scratched. Lay the monitor flat on a table with front face down.
② Remove 'thumb screw' to remove base from monitor column.

<Stopper>

Put the monitor on a flat surface. Press the stopper at the back of the stand while pushing the monitor from the top. Careful attention is required as the monitor is sprung loaded and the stand may expand quickly.

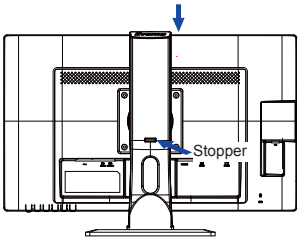

FITTING AND REMOVAL OF BASE : ProLite X2483HSU

CAUTION

- Put the monitor on a stable surface. The monitor may cause injury or damage if it falls or is dropped.
- Do not give a strong impact to the monitor. It may cause damage.
- Unplug the monitor before removal or installation to avoid electric shock or damage.

<Installation>

① Put a piece of soft cloth on the table beforehand to prevent the monitor from being scratched. Lay the monitor flat on a table with front face down.
② Hold the monitor and push the Stand until it clicks and is secure.
③ Hold the monitor and push the Stand-Base until it clicks and is secure.

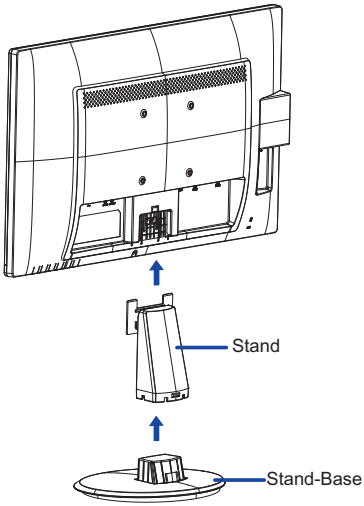

<Removal>

① Put a piece of soft cloth on the table beforehand to prevent the monitor from being scratched. Lay the monitor flat on a table with front face down.
② Press and hold the hooks inside, and pull the Stand-Base.
③ Press the stopper at the top of the stand and pull it to remove the stand from the monitor.

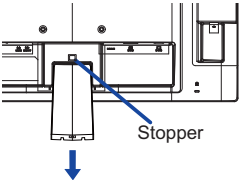

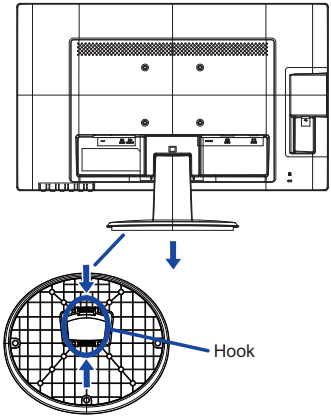

ENGLISH

CONTROLS AND CONNECTORS : ProLite XB2483HSU

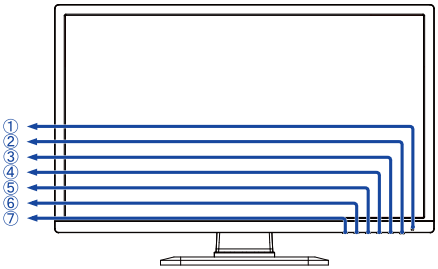

<Front>

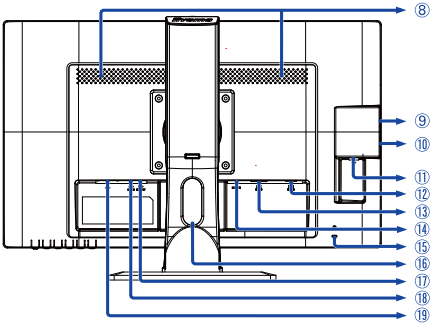

<Back>

① Power Indicator

NOTE Blue: Normal operation
Orange: Power Management

② Power Switch (⏻)

③ Menu / Select Button (MENU)

④ Scroll Up / Volume Button (▶ / 🔈)

⑤ Scroll Down / ECO Mode Button (◀ / 🍃)

⑥ Exit Button (EXIT)

⑦ Auto Button (AUTO)

⑧ Speakers

⑨ USB Downstream Connector (⭠)

⑩ USB Downstream Connector (⭠)

⑪ USB Upstream Connector (⭠)

⑫ VGA(D-sub) mini 15pin Connector (D-SUB)

⑬ DVI-D 24pin Connector (DVI-D)

⑭ HDMI Connector (HDMI)

⑮ Keyhole for Security Lock

NOTE You can fasten a security lock and cable to prevent the monitor from being removed without your permission.

⑯ Cable Holes

⑰ Audio Connector (LINE OUT)

⑱ Audio Connector (LINE IN)

⑲ AC Connector(～ : Alternating current) (～)

CONTROLS AND CONNECTORS : ProLite X2483HSU

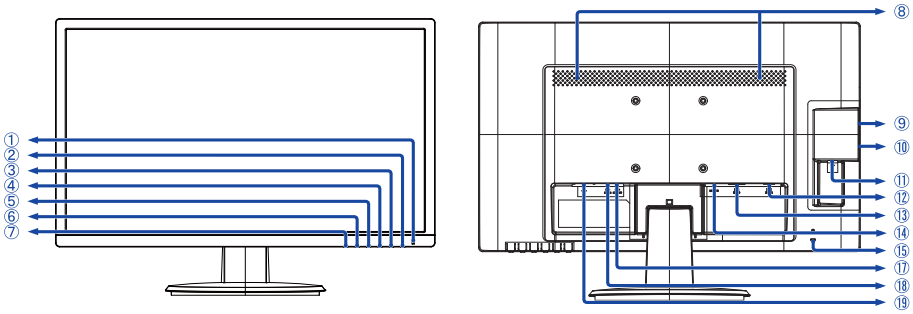

<Front> <Back>

ENGLISH

① Power Indicator

NOTE Blue: Normal operation
Orange: Power Management

② Power Switch (⏻)

③ Menu / Select Button (MENU)

④ Scroll Up / Volume Button (▶ / 🔈)

⑤ Scroll Down / ECO Mode Button (◀ / 🍃)

⑥ Exit Button (EXIT)

⑦ Auto Button (AUTO)

⑧ Speakers

⑨ USB Downstream Connector (⭠)

⑩ USB Downstream Connector (⭠)

⑪ USB Upstream Connector (⭠)

⑫ VGA(D-sub) mini 15pin Connector (D-SUB)

⑬ DVI-D 24pin Connector (DVI-D)

⑭ HDMI Connector (HDMI)

⑮ Keyhole for Security Lock

NOTE You can fasten a security lock and cable to prevent the monitor from being removed without your permission.

⑰ Audio Connector (LINE OUT)

⑱ Audio Connector (LINE IN)

⑲ AC Connector(～ : Alternating current) (～)

CONNECTING YOUR MONITOR : ProLite XB2483HSU

① Ensure that both the computer and the monitor are switched off.
② Connect the computer to the monitor with the signal cable.
③ Connect the monitor to the audio equipment with the Audio Cable for computer when using the audio features.
④ Connect the Power Cable to the monitor first and then to the power supply.
⑤ Turn on your monitor and computer.

ENGLISH

NOTE

- The signal cables used for connecting the computer and monitor may vary with the type of computer used. An incorrect connection may cause serious damage to both the monitor and the computer. The cable supplied with the monitor is for a standard connector. If a special cable is required please contact your local iiyama dealer or regional iiyama office.
- For connection to Macintosh computers, contact your local iiyama dealer or regional iiyama office for a suitable adaptor.
- Make sure you tighten the finger screws at each end of the signal cable.

[Example of Connection]

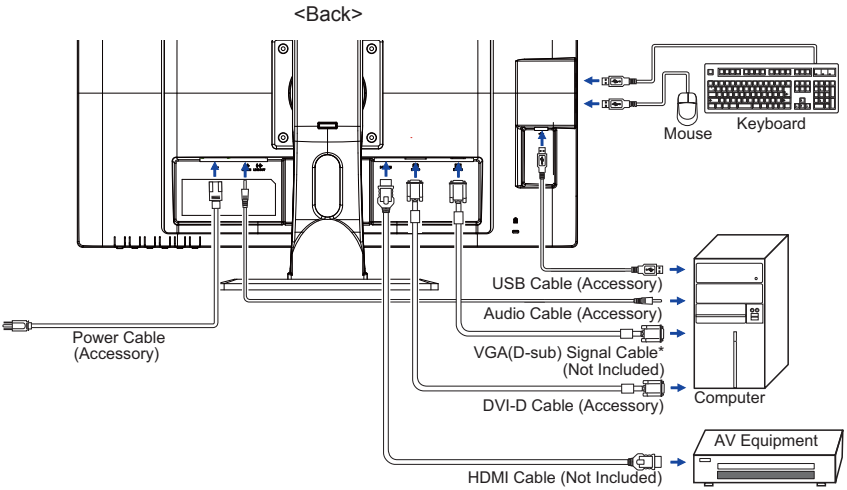

* VGA (D-Sub) cable is not supplied with the monitor; you need to use a special VGA (D-Sub) cable dedicated for this model. Please contact the iiyama Support Centre in your country if you wish to connect the monitor via the VGA input.

[Collect Cables]

① Put the cables through the cable hole.
② Collect cables at the back of the stand.

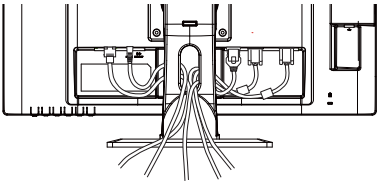

CONNECTING YOUR MONITOR : ProLite X2483HSU

① Ensure that both the computer and the monitor are switched off.
② Connect the computer to the monitor with the signal cable.
③ Connect the monitor to the audio equipment with the Audio Cable for computer when using the audio features.
④ Connect the Power Cable to the monitor first and then to the power supply.
⑤ Turn on your monitor and computer.

NOTE

- The signal cables used for connecting the computer and monitor may vary with the type of computer used. An incorrect connection may cause serious damage to both the monitor and the computer. The cable supplied with the monitor is for a standard connector. If a special cable is required please contact your local iiyama dealer or regional iiyama office.
- For connection to Macintosh computers, contact your local iiyama dealer or regional iiyama office for a suitable adaptor.
- Make sure you tighten the finger screws at each end of the signal cable.

[Example of Connection]

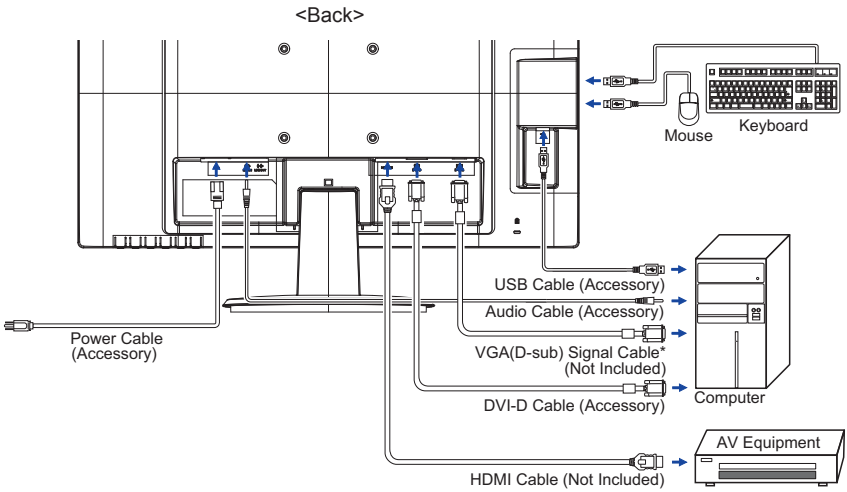

* VGA (D-Sub) cable is not supplied with the monitor; you need to use a special VGA (D-Sub) cable dedicated for this model. Please contact the iiyama Support Centre in your country if you wish to connect the monitor via the VGA input.

COMPUTER SETTING

■ Signal Timing
Change to the desired signal timing listed on page 30: COMPLIANT TIMING.

ADJUSTING THE VIEWING ANGLE : ProLite X2483HSU

ENGLISH

■ For optimal viewing it is recommended to look at the full face of the monitor.
■ Hold the stand so that the monitor does not topple when you change the monitor's angle.
■ You are able to adjust the monitor's angle up to 22° upward, 5° downward.
■ In order to ensure a healthy and relaxed body position when using the monitor at visual display workstations, it is recommended that the adjusted tilt angle should not exceed 10 degrees. Adjust the monitor's angle to your own preference.

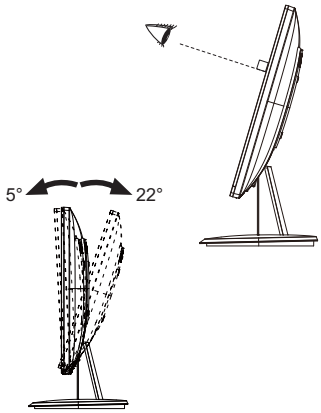

NOTE

■ Do not touch the LCD screen when you change the angle. It may cause damage or break the LCD screen.
■ Careful attention is required not to catch your fingers or hands when you change the angle.

ADJUSTING THE HEIGHT AND THE VIEWING ANGLE : ProLite XB2483HSU

- For optimal viewing it is recommended to position yourself directly opposite to the full face of the monitor, then adjust the monitor's height and angle to your own preference.
- Hold the panel so that the monitor does not topple when you change the monitor's height or angle.
- You are able to adjust the monitor's height up to 130mm, angle up to 45 degrees right and left, 22 degrees upward and 5 degrees downward.

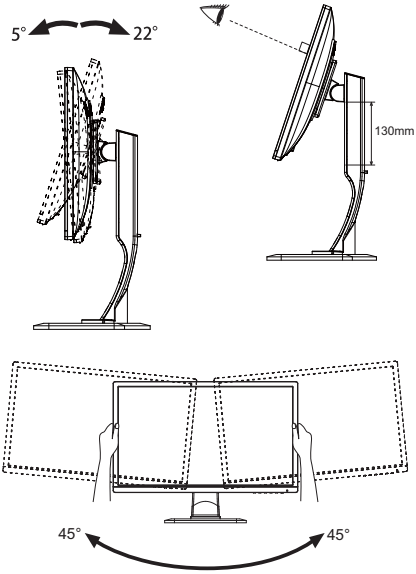

NOTE

- Do not touch the LCD screen when you change the height or the angle. It may cause damage or break the LCD screen.
- Careful attention is required not to catch your fingers or hands when you change the height or the angle.
- Injury can occur if care is not taken to avoid finger contact with the displays base when adjusting the height.

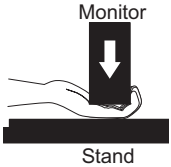

PANEL ROTATION : ProLite XB2483HSU

① Adjust the mother's height.
② Rotate the panel 90 degrees.
Portrait: Turn clockwise.
Landscape: Turn counter clockwise.

NOTE

- Attempting to rotate without fully extending upward may cause damage to stand.
- Video card for portrait display will be required for rotating the image on the screen.

③ Adjust the monitor's angle to your preference.

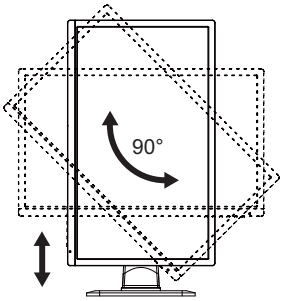

OPERATING THE MONITOR

To create the best picture, your iiyama LCD monitor has been preset at the factory with the COMPLIANT TIMING shown on page 30. You are also able to adjust the picture by following the button operation shown below. For more detailed adjustments, see page 21 for SCREEN ADJUSTMENTS.

① **Press the ENTER Button to start the On Screen Display feature. There are additional Menu items which can be switched by using the ◀ / ▶ Buttons.**

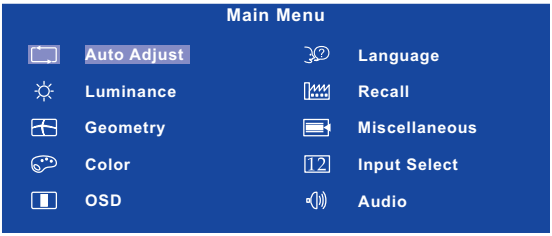

② **Select the Menu item which contains the adjustment icon relating to the adjustment you want to make. Press the ENTER Button. Then, use the ◀ / ▶ Buttons to highlight the desired adjustment icon.**

③ **Press the ENTER Button again. Use the ◀ / ▶ Buttons to make the appropriate adjustment or setting.**

④ **Press the EXIT Button to leave the menu, and the settings you just made would be automatically saved.**

For example, to correct for vertical position, select Menu item of Geometry and then press the ENTER Button. Then, select (V.Position) by using the ◀ / ▶ Buttons. An adjustment page appears after you press the ENTER Button.

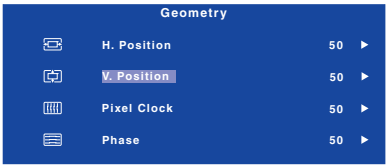

Then, use the ◀ / ▶ Buttons to change the vertical position settings. The vertical position of the overall display should be changing accordingly while you are doing this.

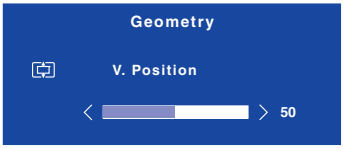

Press the EXIT Button lastly, it ends, all changes are saved in the memory.

NOTE

- When button operations are aborted during adjustment, On-Screen Display disappears when the time set for the OSD Time has passed. Also, press the EXIT button to quickly turn off the On-Screen Display.
- Any changes are automatically saved in the memory when the On Screen Display disappears. Turning off the power should be avoided while using the Menu.
- Adjustments for H. / V. Position, Pixel Clock and Phase are saved for each signal timing. Except for these adjustments, all other adjustments have only one setting which applies to all signal timings.

ADJUSTMENT MENU CONTENTS

Auto Adjust

Only Analog Input

Adjustment Item	Problem / Option	Button to Press
Auto Adjust * Direct	Adjust H. / V. Position, Pixel Clock and Phase automatically.	

* For best results, use the Auto Adjust in conjunction with the adjustment pattern. See page 20 for SCREEN ADJUSTMENTS.

Direct

You can skip the Menu items and display an adjustment scale directly by using the following button operations.

- Auto Adjust : Press the Auto Button when the Menu is not displayed.

Luminance *1,2

Adjustment Item	Problem / Option	Button to Press
Brightness *3	Too dark Too bright	▶ ◀
Contrast	Too dull Too intense	▶ ◀

*1 Luminance adjustment is disabled when Adv. Contrast mode is activated.
*2 Luminance adjustment is disabled when i-Style Color is activated.
*3 Adjust the Brightness when you are using the monitor in a dark room and feel the screen is too bright.

ENGLISH

Geometry

Only Analog Input

Adjustment Item	Problem / Option	Button to Press
H. Position	Too left Too right	▶ ◀
V. Position	Too low Too high	▶ ◀
Pixel Clock	Too narrow Too wide	▶ ◀
Phase	To correct flickering text or lines	▶ ◀

Color*

Adjustment Item	Problem / Option		Button to Press
9300K	Bluish white		
7500K	Yellowish white		
6500K	Reddish white		
User Preset	Red	Too weak	▶
	Green	Too strong	◀
	Blue		

* Color adjustments is disabled when i-Style Color or Blue Light Reducer is activated.

OSD

Adjustment Item	Problem / Option	Button to Press
H.Position	OSD is too left OSD is too right	▶ ◀
V.Position	OSD is too low OSD is too high	▶ ◀
OSD Time	You can set the OSD display duration time between 5 and 30 seconds.	▶ ◀

Language

Adjustment Item	Problem / Option			Button to Press
Language	English	English	Nederlands	Dutch
	Français	French	日本語	Japanese
	Deutsch	German	简体中文	Simplified Chinese
	Italiano	Italian	Русский	Russian
	Polski	Polish	Ĉesky	Czech
	Español	Spanish		

Recall

Adjustment Item	Problem / Option	Button to Press
Recall All	Yes	Factory-preset data is restored.
	No	Return to Menu.

Miscellaneous

Adjustment Item	Problem / Option	Button to Press
Sharpness	1 2 3 4 5 You can change the picture quality from 1 to 5 (sharp to soft). Press the ▶ Button to change the picture quality in numerical order. Press the ◀ Button to change the picture quality in reverse numerical order.	▶ ◀
DDC/CI	On	DDC/CI is turned ON.
	Off	DDC/CI is turned OFF.
NOTE DDC/CI On and Off are switched as follows by pressing the ▶ Button successively. → On → Off →		
Display Information	Displays information regarding the current input signal coming from the graphic card in your computer. **NOTE** See your graphic card user guide for more information about changing the resolution and refresh.	
Adv. Contrast*	On	Increased Contrast Ratio
	Off	Typical Contrast Ratio
Display Mode	Full	Expansion display
	Aspect	Expansion display of Aspect
Overdrive*	Off / 1 / 2 / 3 It will improve the gray level response time of the LCD panel. A higher level results in a faster response time.	▶ ◀
Opening Logo	On	iiyama Logo displayed when the monitor is turned on.
	Off	iiyama Logo does not display when the monitor is turned on.

* Adv. Contrast and Over Drive adjustments are disabled when i-Style Color is activated.

12 Input Select

Adjustment Item	Problem / Option		Button to Press
12 Input Select **Direct**	AUTO*1	D-sub	Select the Analog input.
		DVI	Select the Digital (DVI) input.
		HDMI	Select the Digital (HDMI) input.
	Manual*2	D-sub	Select the Analog input.
		DVI	Select the Digital (DVI) input.
		HDMI	Select the Digital (HDMI) input.

NOTE
*1 It will be selected automatically when the selected signal is not available.
*2 Input source is fixed, not selected automatically when D-sub, DVI and HDMI which are selected.

Direct

You can skip the Menu items and display an adjustment scale directly by using the following button operations.

- Input Select : Pressing and holding of the AUTO Button for 2-3 seconds when the Menu is not displayed.

Audio

Adjustment Item	Problem / Option		Button to Press
Volume **Direct**	Too soft		▶
	Too loud		◀
Mute	On	Turn off the sound temporarily.	
	Off	Return the sound volume to the previous level.	

NOTE Mute On and Off are switched as follows by pressing the ▶ Button successively.
→ On → Off →

HDMI Audio *	Line-In	Select the Line-In input.
	HDMI	Select the HDMI input.

* Suitable for HDMI input only.

Direct

You can skip the Menu items and display an adjustment scale directly by using the following button operations.

- Volume : Press the ▶ Button when the Menu is not displayed.

Direct

You can skip the Menu items and display an adjustment scale directly by using the following button operations.

- ECO Mode : Press the ◀ Button when the Menu is not displayed.
  On : Brightness of back light is reduced.
  Off : Normal

- i-Style Color * : Press the EXIT Button when the Menu is not displayed.
  Off : Return to a state set by color adjustment.
  Standard : For general windows environment and monitor default setting.
  Game : For PC game environment.
  Cinema : For movie and video environment.
  Scenery : For displaying outdoor scenery images.
  Text : For text editing and viewing in a word processing environment.

* i-Style Color is disabled when Blue Light Reducer is activated.

- Blue Light Reducer * : Pressing and holding of the EXIT Button for 1-2 seconds when the Menu is not displayed.
  Off : Normal
  Mode1 : Blue light is reduced.
  Mode2 : Blue light is reduced more than Mode1.
  Mode3 : Blue light is reduced more than Mode2.

* Blue Light Reducer is disabled when i-Style Color is activated.

ENGLISH

● Lock Mode

<OSD Menu>

1. The OSD lock will be activated by pressing the front button ENTER for about 10 seconds. If you try to access the OSD by pressing any of the buttons, message "OSD Locked" will appear on the screen.
2. The OSD lock will be deactivated by pressing the front button ENTER again for about 10 seconds.

<Power Switch>

1. The power switch lock will be activated by pressing the front button ◀ for about 10 seconds. Locking the power switch means that won't be able to turn off the Monitor while the power switch is locked. If presses the power switch message "Power Button Locked" will appear on the screen.
2. The power switch lock will be deactivated by pressing the front button ◀ again for about 10 seconds.

SCREEN ADJUSTMENTS

Adjust the image by following the procedure below to get the desired picture when selecting Analog input.

- The screen adjustments described in this manual are designed to set image position and minimize flicker or blur for the particular computer in use.
- The monitor is designed to provide the best performance at resolution of 1920 × 1080, but can not provide the best at resolutions of less than 1920 × 1080 because the picture is automatically stretched to fit the full screen. It is recommended to operate at resolution of 1920 × 1080 in normal use.
- Displayed text or lines will be blurred or irregular in thickness when the picture is stretched due to the screen enlargement process.
- It is preferable to adjust the image position and frequency with the monitor controls, rather than the computer software or utilities.
- Perform adjustments after a warm-up period of at least thirty minutes.
- Additional adjustments may be required after the Auto Adjust depending on the resolution or signal timing.
- The Auto Adjust may not work correctly when displaying the picture other than the screen adjustment pattern. In this case, manual adjustments are required.

There are two ways to adjust the screen. One way is automatic adjustment for Position, Pixel Clock and Phase. The other way is performing each adjustment manually.
Perform the Auto Adjust first when the monitor is connected to a new computer, or resolution is changed. If the screen has a flicker or blur, or the picture does not fit in the display area after performing the Auto Adjust, manual adjustments are required. Both adjustments should be made by using the screen adjustment pattern (Test.bmp) obtained via the IIYAMA web site (http://www.iiyama.com).
Adjust the image by following the procedure below to get the desired picture.
This manual explains adjustment under Windows® OS.

① **Display the picture at the optimum resolution.**

② **Enter the Test.bmp (screen adjustment pattern) to wallpaper.**

NOTE
- Consult the appropriate documentation for doing this.
- Test.bmp is made at resolution of 1280 × 1024. Set the display position to center in the wallpaper setting dialogue box.

[Adjustment pattern]

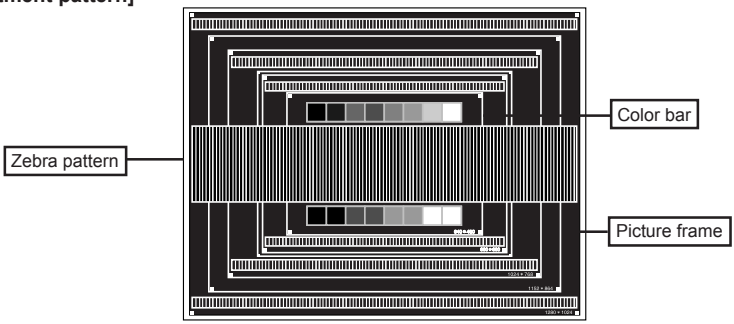

ENGLISH

③ **Press the AUTO Button. (Auto Adjust)**

④ **Adjust the image manually by following procedure below when the screen has a flicker or blur, or the picture does not fit in the display area after performing the Auto Adjust.**

⑤ **Adjust the V.Position so that the top and bottom of the picture frame will fit to the display area.**

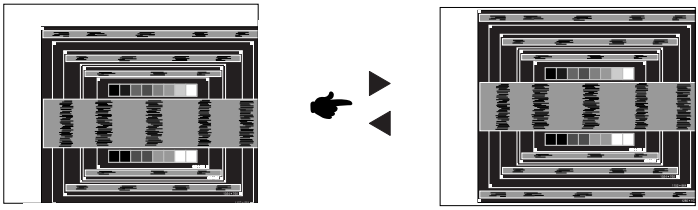

⑥ **1) Adjust the H.Position so that the left side of the picture frame will move to the left edge of the display area.**

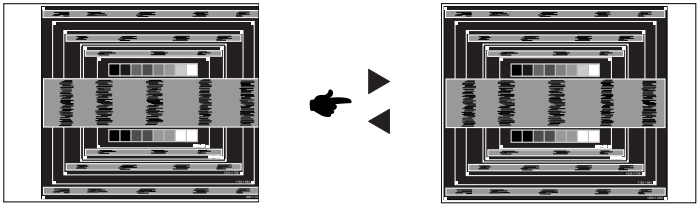

2) Stretch the right side of the picture frame to the right edge of the display area by adjusting the Pixel Clock.

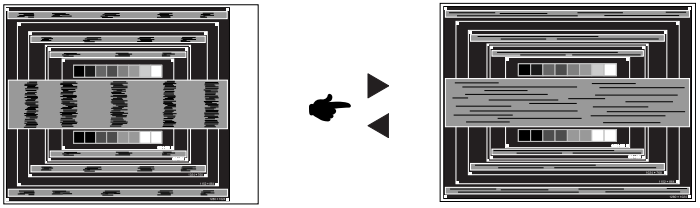

NOTE

- When the left side of the picture frame moves apart from the left edge of the display area during the Pixel Clock adjustment, adjust steps 1) and 2).
- Another way to make the Pixel Clock adjustment is to correct the vertical wavy lines in the zebra pattern.
- The picture may flicker during the Pixel Clock, H.Position and V.Position adjustment.
- In case the picture frame is bigger or smaller than the data display area after the Pixel Clock adjustment, repeat steps from ③.

⑦ **Adjust the Phase to correct horizontal wavy noise, flicker or blur in the zebra pattern.**

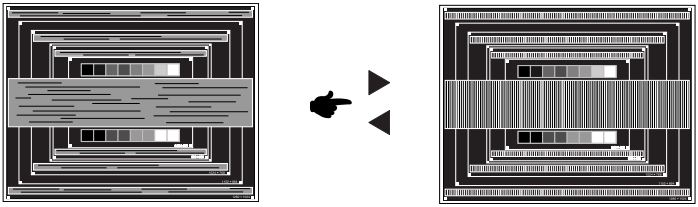

NOTE

- In case the strong flicker or blurs remain on a part of the screen, repeat steps ⑥ and ⑦ because the Pixel Clock may not be adjusted correctly.
- Adjust the H.Position after the Phase adjustment if the horizontal position moves during the adjustment.

ENGLISH

⑧ **Adjust the Brightness and Color to get the desired picture after you complete the Pixel Clock and Phase adjustments.**

Put back your favorite wallpaper.

POWER MANAGEMENT FEATURE

The power management feature of this product complies with power saving requirement of ENERGY STAR® and VESA DPMS. When activated, it automatically reduces unnecessary power consumption of the monitor when your computer is not in use.
To use the feature, the monitor needs to be connected to a VESA DPMS compliant computer. There is a power management step the monitor takes as described below. The power management function, including any timer settings is configured by the operating system. Check your operating system manual for information on how this can be configured.

ENGLISH

■ **Power Management Mode**

When the H-sync signal / V-sync signal / H and V sync signals from the computer are off, the monitor enters into Power Management Mode which reduces the power consumption to less than 0.5W. The screen becomes dark, and the power indicator turns to orange. From Power Management Mode, the image reappears in several seconds when either the keyboard or the mouse are touched again.

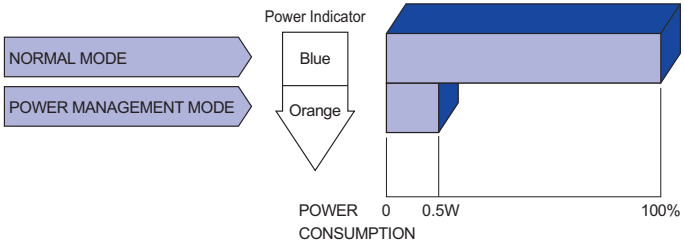

NOTE

■ Even when using the power management mode, the monitor consumes electricity. Turn off the Power Switch whenever the monitor is not in use, during the night and weekends, to avoid unnecessary power consumption.

■ It is possible that the video signal from the computer may be on while the H or V sync signal is missing. In this instance, the POWER MANAGEMENT feature may not work properly.

TROUBLE SHOOTING

If the monitor fails to operate correctly, please follow the steps below for a possible solution.

1. Perform the adjustments described in OPERATING THE MONITOR, depending on the problem you have. If the monitor does not get a picture, skip to 2.
2. Consult the following items if you cannot find an appropriate adjustment item in OPERATING THE MONITOR or if the problem persists.
3. If you are experiencing a problem which is not described below or you cannot correct the problem, discontinue using the monitor and contact your dealer or iiyama service center for further assistance.

ENGLISH

Problem	Check
① The picture does not appear.	
(Power indicator does not light up.)	☐ The Power Cable is firmly seated in the socket. ☐ The Power Switch is turned ON. ☐ The AC socket is live. Please check with another piece of equipment.
(Power indicator is blue.)	☐ If the blank screen saver is in active mode, touch the keyboard or the mouse. ☐ Increase the Contrast and/or Brightness. ☐ The computer is ON. ☐ The Signal Cable is properly connected. ☐ The signal timing of the computer is within the specification of the monitor.
(Power indicator is orange.)	☐ If the monitor is in power management mode, touch the keyboard or the mouse. ☐ The computer is ON. ☐ The Signal Cable is properly connected. ☐ The signal timing of the computer is within the specification of the monitor.
② The screen is not synchronized.	☐ The Signal Cable is properly connected. ☐ The signal timing of the computer is within the specification of the monitor. ☐ The video output level of the computer is within the specification of the monitor.
③ The screen position is not in the center.	☐ The signal timing of the computer is within the specification of the monitor.
④ The screen is too bright or too dark.	☐ The video output level of the computer is within the specification of the monitor.

Problem	Check
⑤ The screen is shaking.	☐The power voltage is within the specification of the monitor. ☐The signal timing of the computer is within the specification of the monitor.
⑥ No sound.	☐The audio equipment (computer etc.) is ON. ☐The Audio Cable is properly connected. ☐The Volume is turned up. ☐The Mute is OFF. ☐The audio output level of the audio equipment is within the specification of the monitor.
⑦ The sound is too loud or too quiet.	☐The audio output level of the audio equipment is within the specification of the monitor.
⑧ A strange noise is heard.	☐The Audio Cable is properly connected.

ENGLISH

RECYCLING INFORMATION

For better environment protection please don't dispose your monitor.
Please visit our web site: www.iiyama.com/recycle for monitor recycling.

APPENDIX

Design and specifications are subject to change without prior notice.

SPECIFICATIONS : ProLite XB2483HSU

Size Category		24"
LCD Panel	Panel Technology	AMVA
	Size	Diagonal: 23.8" (60.5cm)
	Pixel pitch	0.275mm H × 0.275mm V
	Brightness	250cd/m^2 (Typical)
	Contrast ratio	3000 : 1 (Typical), Adv. Contrast Function Available
	Viewable angle	Right / Left : 89 degrees each, Up / Down : 89 degrees each (Typical)
	Response time	4ms (Gray to Gray)
Display Colours		16,777,216
Sync Frequency		Horizontal: 30.0-80.0kHz, Vertical: 55-75Hz
Maximum Resolution		1920 × 1080, 2.1 MegaPixels
Input Connector		VGA(D-sub) mini 15 pin, DVI-D 24 pin, HDMI
Plug & Play		VESA DDC2B™
Input Sync Signal		Separate sync: TTL, Positive or Negative
Input Video Signal		Analog: 0.7Vp-p (Standard), 75Ω, Positive Digital: DVI (Digital Visual Interface Standard Rev.1.0) compliance Digital: HDMI
USB Standard		USB2.0
Number of USB Ports Connector shape		1 Upstream : Series B 2 Downstream : Series A
Input Audio Connector		ø 3.5mm mini jack (Stereo)
Input Audio Signal		1.0Vrms maximum
Output Audio Connector		ø 3.5mm mini jack (Stereo)
Speakers		2W × 2 (Stereo speakers)
Maximum Screen Size		527.0mm W × 296.5mm H / 20.7" W × 11.7" H
Power Source		100-240VAC, 50/60Hz, 1.5A
Power Consumption*[1]		26W typical, Power management mode: 0.5W maximum Energy Efficiency Class: B
Dimensions / Net Weight		552.5 × 381.0 - 511.0 × 230.0mm / 21.8 × 15.0 - 20.1 × 9.1" (W×H*[2]×D) 5.6kg / 12.3lbs
Tilt Angle		Upward: 22 degrees Downward: 5 degrees, Left/Right: 45 degrees each
Environmental Considerations		Operating: Temperature 5 to 35°C / 41 to 95°F Humidity 10 to 80% (No condensation) Storage: Temperature -20 to 60°C / -4 to 140°F Humidity 5 to 85% (No condensation)
Approvals		TCO Certified, CE, TÜV-GS, VCCI-B, PSE, CU, ENERGY STAR®

NOTE

*[1] Audio/USB equipment is not connected.

*[2] The height of the top of the monitor except the stand height.

ENGLISH

SPECIFICATIONS : ProLite X2483HSU

Size Category		24"
LCD Panel	Panel Technology	AMVA
	Size	Diagonal: 23.8" (60.5cm)
	Pixel pitch	0.275mm H × 0.275mm V
	Brightness	250cd/m^2 (Typical)
	Contrast ratio	3000 : 1 (Typical), Adv. Contrast Function Available
	Viewable angle	Right / Left : 89 degrees each, Up / Down : 89 degrees each (Typical)
	Response time	4ms (Gray to Gray)
Display Colours		16,777,216
Sync Frequency		Horizontal: 30.0-80.0kHz, Vertical: 55-75Hz
Maximum Resolution		1920 × 1080, 2.1 MegaPixels
Input Connector		VGA(D-sub) mini 15 pin, DVI-D 24 pin, HDMI
Plug & Play		VESA DDC2B™
Input Sync Signal		Separate sync: TTL, Positive or Negative
Input Video Signal		Analog: 0.7Vp-p (Standard), 75Ω, Positive Digital: DVI (Digital Visual Interface Standard Rev.1.0) compliance Digital: HDMI
USB Standard		USB2.0
Number of USB Ports Connector shape		1 Upstream : Series B 2 Downstream : Series A
Input Audio Connector		ø 3.5mm mini jack (Stereo)
Input Audio Signal		1.0Vrms maximum
Output Audio Connector		ø 3.5mm mini jack (Stereo)
Speakers		2W × 2 (Stereo speakers)
Maximum Screen Size		527.0mm W × 296.5mm H / 20.7" W × 11.7" H
Power Source		100-240VAC, 50/60Hz, 1.5A
Power Consumption*		26W typical, Power management mode: 0.5W maximum Energy Efficiency Class: B
Dimensions / Net Weight		552.5 × 406.5 × 203.0mm / 21.8 × 16.0 × 8.0" (W×H×D) 3.9kg / 8.6lbs
Tilt Angle		Upward: 22 degrees Downward: 5 degrees
Environmental Considerations		Operating: Temperature 5 to 35°C / 41 to 95°F Humidity 10 to 80% (No condensation) Storage: Temperature -20 to 60°C / -4 to 140°F Humidity 5 to 85% (No condensation)
Approvals		TCO Certified, CE, TÜV-GS, VCCI-B, PSE, CU, ENERGY STAR®

NOTE * Audio/USB equipment is not connected.

ENGLISH

DIMENSIONS : ProLite XB2483HSU

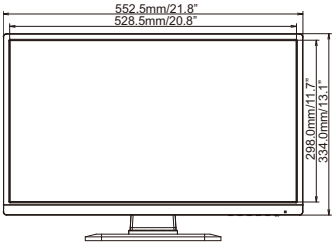

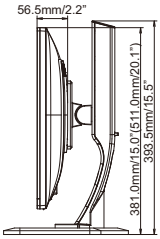

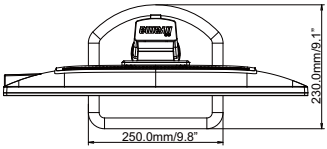

( ) : Maximum adjustment range

DIMENSIONS : ProLite X2483HSU

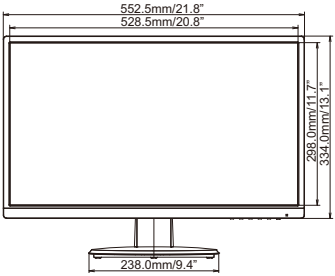

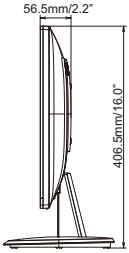

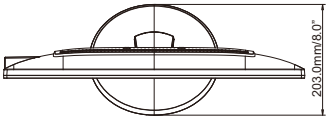

COMPLIANT TIMING

Video Mode			Horizontal Frequency	Vertical Frequency	Dot Clock	
VESA	VGA	640×480	31.469kHz	59.940Hz	25.175MHz	
	SVGA	800×600	37.879kHz	60.317Hz	40.000MHz	
	XGA	1024×768	48.363kHz	60.004Hz	65.000MHz	
	SXGA	1280×1024	63.981kHz	60.020Hz	108.000MHz	
	WXGA+	1440×900	55.935kHz	59.887Hz	106.500MHz	
	UXGA	1600×1200	75.000kHz	60.000Hz	162.000MHz	
	WSXGA+	1680×1050	65.290kHz	60.000Hz	146.250MHz	
	Full HD	1920×1080	66.590kHz	59.930Hz	138.500MHz	
VGA TEXT		640×350	31.469kHz	70.087Hz	25.175MHz	*
		720×400	31.469kHz	70.087Hz	28.322MHz	*

NOTE * DVI input is not compliant.